

INSTALL GUIDE
ZHAGA CONTROLLER

DOC-1000647-A-6
4/26

Part Number: ZHA-S1

DESCRIPTION

The Zhaga Controller provides wireless control of LED fixtures that have DALI-2 LED drivers and standard Zhaga connectors.

SPECIFICATIONS

- Radio Frequency: 2.4 GHz (IEEE 802.15.4)
- RF Transmission Output Power: +20dBM
- Operating Temperature: -40° to +70° C
- Operating Humidity: 10 to 95%, non-condensing
- IP66 Rated Enclosure
- IK09 Enclosure Impact Rating
- Dimensions: 3.15″ D x 1.5″ H (80mm D x 38mm H)
- Surge Protection**:** 4kV
- Sensor Input: 24V
- Input Voltage (CV): 12-24VDC

WARNINGS AND CAUTIONS

- **TURN OFF POWER** AT CIRCUIT BREAKER OR FUSE AND TEST THAT POWER IS OFF BEFORE INSTALLING!
- The Zhaga Lighting Controller should only be installed in a fixture with a Zhaga Book 18 receptacle.
- Failure to follow these instructions and warnings could potentially void warranty.
- This product must be installed in accordance with national, state, and local electrical codes and requirements
- If you are unsure about any part of these instructions, consult an electrician; all work should be performed by qualified personnel.
- Disconnect power at circuit breaker or fuse when servicing, installing, or removing fixture or changing lamps.

For Support- Please contact your commissioning agent or installer, or open a support ticket at- https://support.synapsewireless.com/

WIRING DETAILS OF ZHAGA BOOK 18 SOCKET

TURN OFF POWER AT CIRCUIT BREAKER OR FUSE AND VERIFY THAT POWER IS OFF BEFORE WIRING!

If a motion sensor or the Zhaga socket needs to be wired up prior to installing the Zhaga Lighting Controller, please refer to the wiring details. **(See Figure 1)**

For more details on the installation, assembly, or wiring the Zhaga socket/receptacle please visit:
www.zhagastandard.org

FIGURE 1

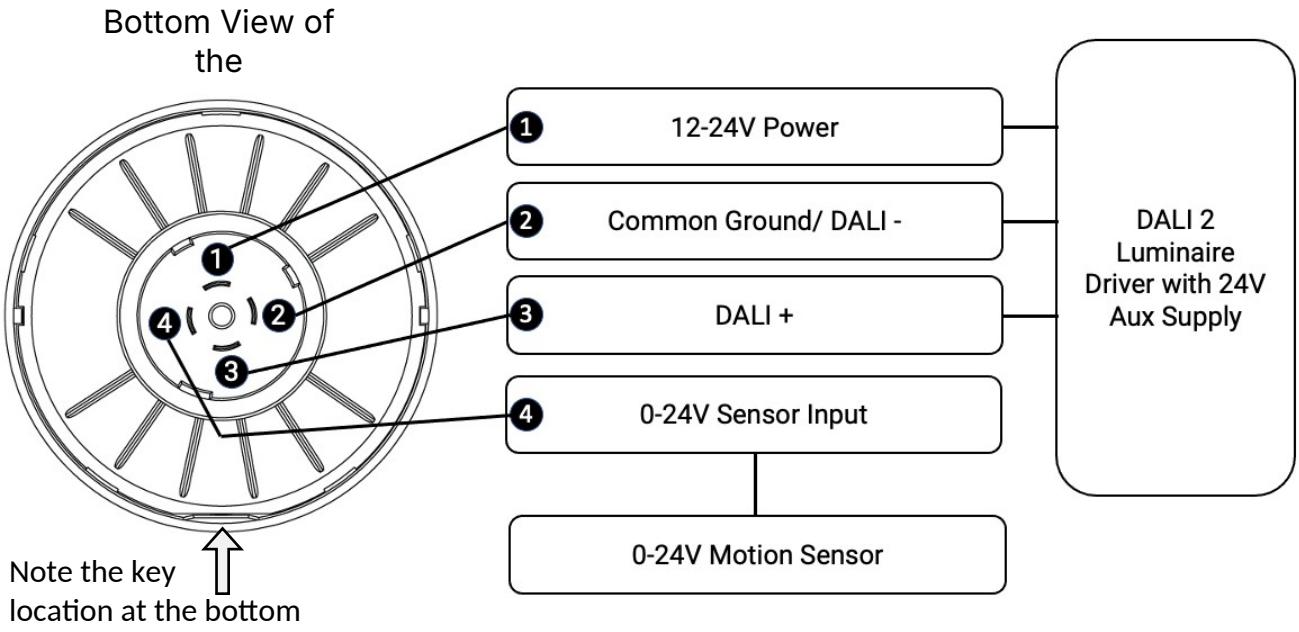

INSTALLATION INSTRUCTIONS

TURN OFF POWER AT CIRCUIT BREAKER OR FUSE AND VERIFY THAT POWER IS OFF BEFORE WIRING!

1. If applicable, remove the sealing cap or lighting control device currently installed in the fixture receptacle.
2. Align the Zhaga Lighting Controller such that the contacts pins are positioned above the receptacle contact. Lightly rotate the Zhaga Controller until you feel the alignment keys and the blades align to the proper location.
3. After alignment, push downward until the Zhaga Controller is all the way down on the receptacle.
4. While pressing down, twist the Zhaga Lighting Controller housing clockwise until it locks into place. The Zhaga Lighting Controller includes a latching key or notch that will lock into position with an audible “click”. **(See Figure 2)**

Note: To function properly, make sure the controller is inserted completely into the socket and twisted into the locked position.

Note: Upon power up, the device will turn on the lamps to 100%, then ramp down to off over 2 seconds, stay off for 2 seconds, and then ramp back up to 100% over 2 seconds.

FIGURE 2

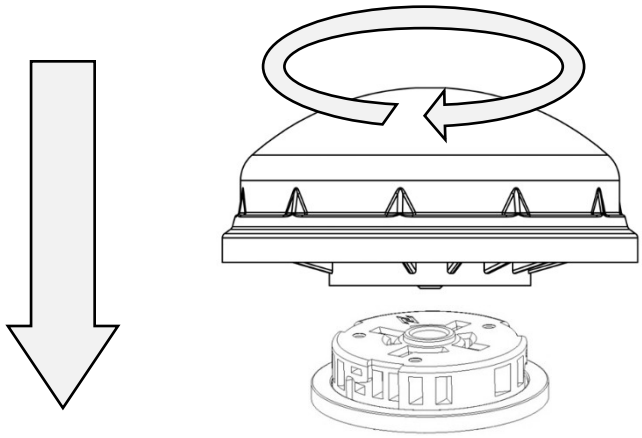

REGULATORY INFORMATION AND CERTIFICATIONS

RF Exposure Statement: This equipment complies with FCC radiation exposure limits set forth for an uncontrolled environment. This equipment should be installed and operated with minimum distance of 20cm between the radiator and your body. This transmitter must not be co-located or operating in conjunction with any other antenna or transmitter.

Industry Canada (IC) certifications: This digital apparatus does not exceed the Class B limits for radio noise emissions from digital apparatus set out in the Radio Interference Regulations of the Canadian Department of Communications.

Le present appareil numerique n'emet pas de bruits radioelectriques depassant les limites applicable aux appareils numeriques de la class B prescrites dans le Reglement sur le brouillage radioelectrique edicte par le ministere des Communications du Canada.

FCC certifications and regulatory information (USA only)

FCC Part 15 Class B: This device complies with part 15 of the FCC rules. Operation is subject to the following two conditions: (1) These devices may not cause harmful interference, and (2) These devices must accept any interference received, including interference that may cause harmful operation.

RADIO FREQUENCY INTERFERENCE (RFI) (FCC 15.105): This equipment has been tested and found to comply with the limits for a Class B digital device, pursuant to Part 15 of the FCC rules. These limits are designed to provide reasonable protection against harmful interference in a residential installation. This equipment generates, uses, and can radiate radio frequency energy and, if not installed and used in accordance with the instructions, may cause harmful interference to radio communications. However, there is no guarantee that interference will not occur in a

particular installation. If this equipment does cause harmful interference to radio or television reception, which can be determined by turning the equipment off and on, the user is encouraged to try to correct the interference by one or more of the following measures: (1) Re-orient or relocate the receiving antenna; (2) Increase the separation between the equipment and the receiver; (3) Connect the equipment into an outlet on a circuit different from that to which the receiver is connected; (4) Consult the dealer or an experienced radio/TV technician for help.

Declaration of Conformity (FCC 96-208 & 95-19): Synapse Wireless, Inc. declares that the product name "ZHA-S1" to which this declaration relates, meet the requirements specified by the Federal Communications Commission as detailed in the following specifications:

- Part 15, Subpart B, for Class B equipment
- FCC 96-208 as it applies to Class B personal computers and peripherals
- This product has been tested at an External Test Laboratory certified per FCC rules and has been found to meet the FCC, Part 15, Emission Limits. Documentation is on file and available from Synapse Wireless, Inc.

If the FCC ID for the module inside this product enclosure is not visible when installed inside another device, then the outside of the device into which this product is installed must also display a label referring to the enclosed module FCC ID. Modifications (FCC 15.21): Changes or modifications to this equipment not expressly approved by Synapse Wireless, Inc., may void the user's authority to operate this equipment.

Patented – virtual marking at
https://www.synapsewireless.com/about/patents

CERTIFICATIONS

Model : ZHA-S1
Contains FCC ID : U9O-SM220
Contains IC : 7084A-SM220
RoHS 3 :2011/65/EU (2015/863)
EU REACH :(EC) No 1907/2006
CE and UKCA

D4i Certified

DALi-2 Certified